BUNN®

ITEM#

PROJECT

DATE

SH Servers, Stands & Docking System

1.5 gallon SH Servers on 1SH Stand

(sold separately)
Dimensions: 28.2" H x 10" W x 14" D
(71.6cm H x 25.4cm W x 35.6cm D)

Features

Remote Docking Station

- Remote one & two server docking stations for additional satellite coffee serving.
- Soft Heat® servers supply controlled heat to coffee to maintain flavor and temperature.
- LED power indicator shows server is operational.
- Docking stations have instant power contact with servers.
- Safety-Fresh® patented brew-through lid with vapor seal and spill prevention.
- International electrical configurations available.

2SH Stand

Dimensions: 11.6" H x 18.7" W x 13.2" D
(29.5cm H x 47.5cm W x 33.5cm D)

For current specification sheets and other information, go to *www.bunn.com*.

Related Products

One Position Drip Tray
For use with Single/Single SH
Product No. : 26830.0000

Two Position Drip Tray
For use with Dual/Dual SH
Product No. : 27150.0000

Model	Agency Listing
SH Server	UL LISTED NSF
1SH Stand	UL LISTED
2SH Stand	UL LISTED

Dimensions & Specifications

Model	Product #	Volts	Amps	Total Watts	Description	Cubic Measure	Shipping Weight	Cord Attached
1SH Stand	27825.0000	120	.8	90	1 SH Server	1.2 ft³	13 lbs.	Yes
1SH Stand*	27825.0003	120	.8	90	1 SH Server 4" adj legs	1.2 ft³	13 lbs.	Yes
1SH Stand*	27825.0004	120	.8	90	1 SH Server, 6" legs	1.2 ft³	13 lbs.	Yes
2SH Stand	27875.0000	120	1.5	180	2 SH Servers	2.1 ft³	22 lbs.	Yes
2SH Stand*	27875.0003	120	1.5	180	2 SH Servers	2.1 ft³	22 lbs.	Yes
SH Server	27850.0001	n/a	n/a	n/a	1.5 Gal	2.4 ft³	17 lbs.	No
SH Server*	27850.0004	n/a	n/a	n/a	1.5 Gal, 30 min.	2.4 ft³	18 lbs.	No
SH Server	27850.0006	n/a	n/a	n/a	1.5 Gal, 45 min.	2.4 ft³	17 lbs.	No
SH Server*	27850.0008	n/a	n/a	n/a	1.5 Gal, 60 min.	2.4 ft³	17 lbs.	No
SH Server	27850.0009	n/a	n/a	n/a	1.5 Gal, adj. timer	2.2 ft³	17 lbs.	No
SH Server	27850.0016	n/a	n/a	n/a	1.5 Gal, 240 min.	2.4 ft³	17 lbs.	No
SH Server*	27850.0022	n/a	n/a	n/a	1.5 Gal, 120 min.	2.4 ft³	17 lbs.	No

** Models have black decor.*

Electrical: 2-wires plus ground service rated 120V, single phase, 60Hz.

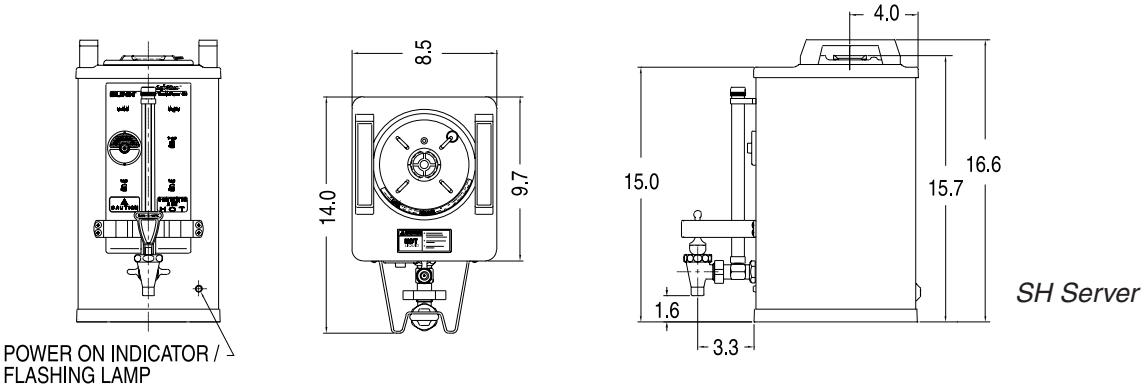

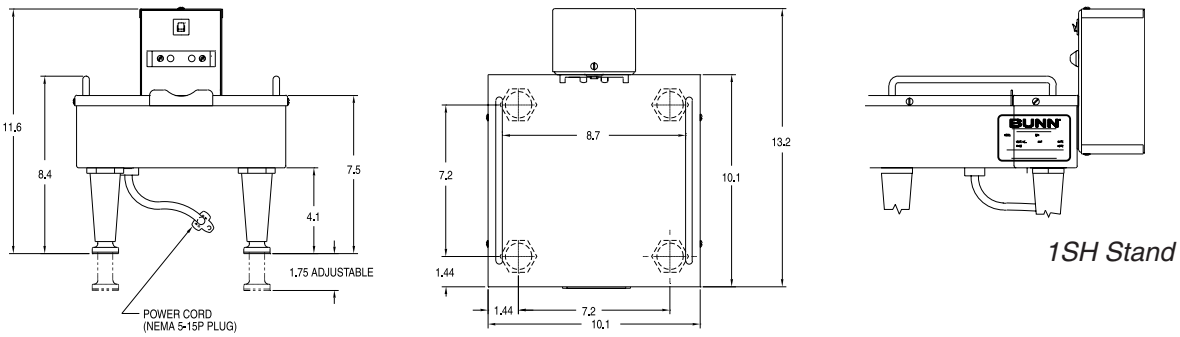

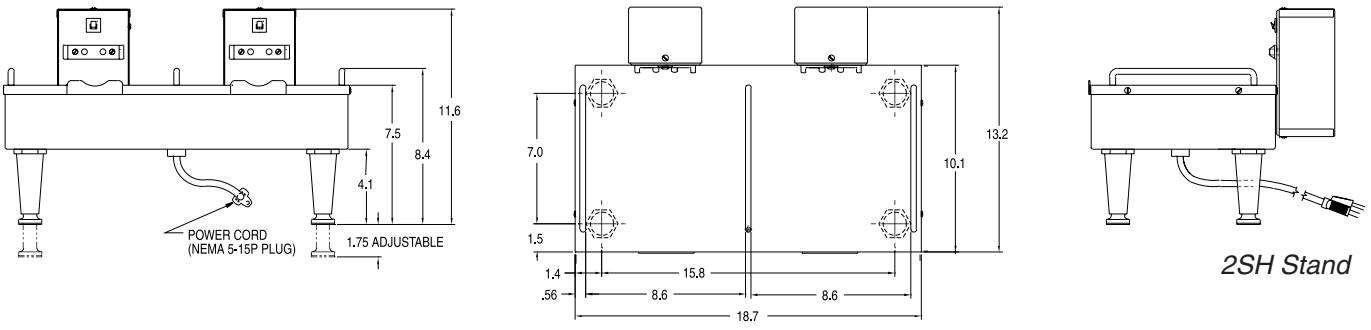

Bunn-O-Matic® Corporation - 1400 Stevenson Drive Springfield, Illinois 62703 • 800-637-8606 • 217-529-6601 • Fax 217-529-6644 • www.bunn.com

BUNN® practices continuous product research and improvement. We reserve the right to change specifications and product design without notice. Such revisions do not entitle the buyer to corresponding changes, improvements, additions or replacements for previously purchased equipment.

1/09 © Bunn-O-Matic Corporation

All dimensions shown in inches.