Profit from the Eagle Advantage®

Specification Sheet

Item No.: _____
Project No.: _____
S.I.S. No.: _____

Snap-n-Slide® Wall Shelves

MODELS:

❑ ***SWS1224-****	❑ ***SWS1524-****	❑ ***SWS1524-*-VMAR***
❑ ***SWS1236-****	❑ ***SWS1536-****	❑ ***SWS1536-*-VMAR***
❑ ***SWS1248-****	❑ ***SWS1548-****	❑ ***SWS1548-*-VMAR***
❑ ***SWS1260-****	❑ ***SWS1560-****	❑ ***SWS1560-*-VMAR***
❑ ***SWS1272-****	❑ ***SWS1572-****	❑ ***SWS1572-*-VMAR***

** See charts on back page for complete model numbers.*

Short Form Specifications

Eagle Snap-n-Slide® Wall Shelf with Rolled Front Edge, model _____. Unit constructed of 16/430, 16/304, or 14/304 stainless steel. Front rolled edge with 1½″ upturn on rear and ends. Stainless steel wall brackets are shipped loose for mounting directly to wall studs.

Eagle Snap-n-Slide® Wall Shelf with "V" Marine Front Edge, model _____. Unit constructed of 16/430, 16/304, 14/304, or 14/316 stainless steel. "V" marine front edge with 1½″ upturn on rear and ends. Stainless steel wall brackets are shipped loose for mounting directly to wall studs.

#SWS1236-16/4 wall shelf

Options / Accessories

❑ Solid Dividers – 16 gauge stainless steel, 4″ (76mm)-high

Design and Construction Features

- Brackets can be mounted to studs—no wall backing required.
- Heavy gauge stainless steel construction.
- 1½″ (38mm) upturn on rear and ends of shelf.
- Models available with 1½″ (38mm) rolled front edge or 1¾″ (45mm) "V" marine edge on shelf.
- 12″ and 15″ (305 and 381mm) widths available.
- Lengths available range from 24″ to 72″ (610 to 1829mm).
- No tools required to attach shelf to wall brackets.

EAGLE GROUP
100 Industrial Boulevard, Clayton, DE 19938-8903 USA
Phone: 302-653-3000 • Fax: 302-653-2065
www.eaglegrp.com

Foodservice Division: Phone 800-441-8440
MHC/Retail Display Divisions: Phone 800-637-5100

Certifications / Approvals

NSF

AutoQuotes

KCL

For custom configuration or fabrication needs, contact our **SpecFAB® Division.**
Phone: 302-653-3000 • Fax: 302-653-3091 • e-mail: specfab@eaglegrp.com

Spec sheets available for viewing, printing or downloading from our online literature library at *www.eaglegrp.com*

Eagle Foodservice Equipment, Eagle MHC, SpecFAB®, and Retail Display are divisions of Eagle Group. ©2009 by the Eagle Group

EAGLE GROUP®
Profit from the Eagle Advantage®

Item No.: _____
Project No.: _____
S.I.S. No.: _____

Snap-n-Slide® Wall Shelves

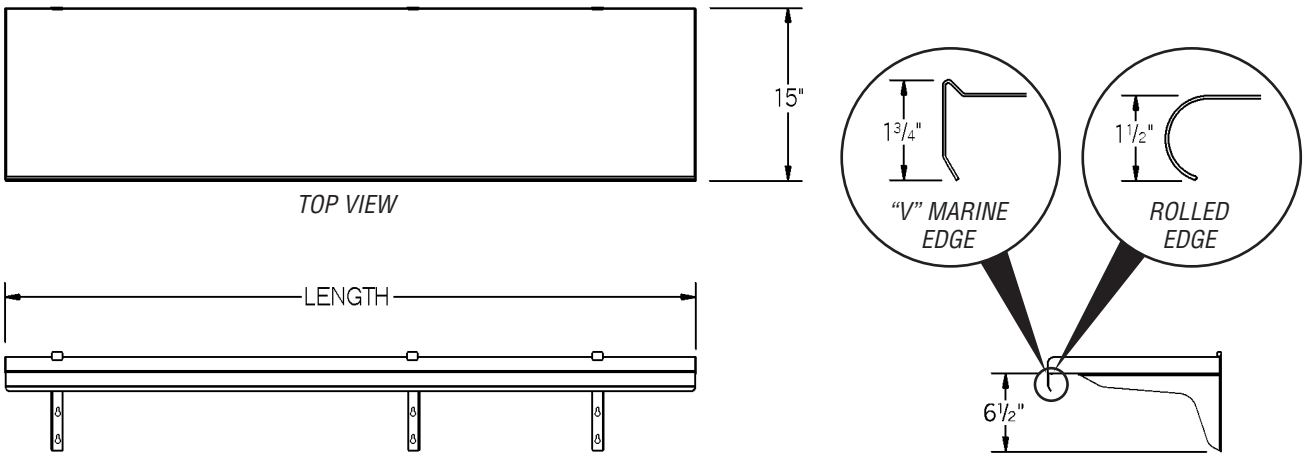

(15˝ wide shelf shown)

SHELVES WITH ROLLED FRONT EDGE

12˝ (305mm)-WIDE SHELVES					15˝ (381mm)-WIDE SHELVES								
16 GAUGE TYPE 430 model #	16 GAUGE TYPE 304 model #	14 GAUGE TYPE 304 model #	weight lbs.	weight kg	16 GAUGE TYPE 430 model #	16 GAUGE TYPE 304 model #	14 GAUGE TYPE 304 model #	weight lbs.	weight kg	shelf length in.	shelf length mm	weight capacity lbs.	weight capacity kg
SWS1224-16/4	*SWS1224-16/3*	*SWS1224-14/3*	12	5.4	*SWS1524-16/4*	*SWS1524-16/3*	*SWS1524-14/3*	15	6.8	24˝	610	90	40.8
SWS1236-16/4	*SWS1236-16/3*	*SWS1236-14/3*	14	6.4	*SWS1536-16/4*	*SWS1536-16/3*	*SWS1536-14/3*	17	7.7	36˝	914	135	61.2
SWS1248-16/4	*SWS1248-16/3*	*SWS1248-14/3*	17	7.7	*SWS1548-16/4*	*SWS1548-16/3*	*SWS1548-14/3*	21	9.5	48˝	1219	180	81.6
SWS1260-16/4	*SWS1260-16/3*	*SWS1260-14/3*	23	10.4	*SWS1560-16/4*	*SWS1560-16/3*	*SWS1560-14/3*	28	12.7	60˝	1524	225	102.1
SWS1272-16/4	*SWS1272-16/3*	*SWS1272-14/3*	25	11.3	*SWS1572-16/4*	*SWS1572-16/3*	*SWS1572-14/3*	30	13.6	72˝	1829	270	122.5

15˝ (381mm)-WIDE SHELVES WITH "V" MARINE FRONT EDGE

14 GAUGE TYPE 304 model #	14 GAUGE TYPE 316 model #	16 GAUGE TYPE 430 model #	16 GAUGE TYPE 304 model #	weight lbs.	weight kg	shelf length in.	shelf length mm	weight capacity lbs.	weight capacity kg
SWS1524-14/304-VMAR	*SWS1524-14/316-VMAR*	*SWS1524-16/430-VMAR*	*SWS1524-16/304-VMAR*	15	6.8	24˝	610	90	40.8
SWS1536-14/304-VMAR	*SWS1536-14/316-VMAR*	*SWS1536-16/430-VMAR*	*SWS1536-16/304-VMAR*	17	7.7	36˝	915	135	61.2
SWS1548-14/304-VMAR	*SWS1548-14/316-VMAR*	*SWS1548-16/430-VMAR*	*SWS1548-16/304-VMAR*	21	9.5	48˝	1219	180	81.6
SWS1560-14/304-VMAR	*SWS1560-14/316-VMAR*	*SWS1560-16/430-VMAR*	*SWS1560-16/304-VMAR*	28	12.7	60˝	1524	225	102.1
SWS1572-14/304-VMAR	*SWS1572-14/316-VMAR*	*SWS1572-16/430-VMAR*	*SWS1572-16/304-VMAR*	30	13.6	72˝	1829	270	122.5

EAGLE GROUP
100 Industrial Boulevard, Clayton, DE 19938-8903 USA
Phone: 302-653-3000 • Fax: 302-653-2065
www.eaglegrp.com

Foodservice Division: Phone 800-441-8440
MHC/Retail Display Divisions: Phone 800-637-5100

Printed in U.S.A.
©2009 by Eagle Group
Rev. 09/09

Spec sheets available for viewing, printing or downloading from our online literature library at *www.eaglegrp.com*

Although every attempt has been made to ensure the accuracy of the information provided, we cannot be held responsible for typographical or printing errors. Information and specifications are subject to change without notice. Please confirm at time of order.