SUNFIRE®

X Series 60" Raised Griddle/Broiler Gas Range

Item: _____

Quantity: _____

Project: _____

Approval: _____

Date: _____

X Series 60" Raised Griddle/Broiler Gas Range

Models:

☐ X60-6R24RR ☐ X60-6R24RS

Model X60-6R24RR

NOTE: Ranges supplied with casters must be installed with an approved restraining device.

Standard Features:

- Large 27" (686mm) work top surface
- Stainless steel front and sides
- Stainless steel 4" (102mm) plate rail
- Stainless steel backguard w/ removable stainless steel shelf
- 24" (610mm) raised griddle broiler section w/3 cast iron burners each rated 14,500 Btuh/4-25kW
- 12" (305mm) section stamped drip trays w/ dimpled bottom
- Durable easy to read control knobs
- Easy to clean 6" (152mm) steel core, injected molded legs
- Pressure regulator, 1" NPT
- Ergonomic split cast iron top ring grates
- 30,000 Btuh/ 8.79 kW 2 piece cast iron "Q" style donut open burner
- 5/8" (15mm) thick steel griddle plate w/manual hi/lo valve control
- 4-1/4" (108mm) wide grease trough
- Heavy duty oven door w/keep-cool handle
- Straight steel tube oven burner 33,000 Btuh/9.67 kW
- Standard size Sunfire oven w/ ribbed porcelain oven bottom and door interior, aluminized top, sides and back
- Oven thermostat w/ Low to 500° F (260° C)
- Nickel plated oven rack with two fixed position oven rack guides
- Cabinet base in lieu of oven(s)

Optional Features:

☐ Low profile 9-3/8" (238mm) back-guard stainless steel front and sides

☐ Additional oven racks

☐ 6" (152mm) swivel casters (4), w/ front locking

☐ Celsius temperature dials

Specifications:

Gas restaurant series range with 2 standard size Sunfire ovens. 59-1/16" (1500mm) wide with a 27" (686mm) deep work top surface. Stainless steel front, sides and 4"(102mm) wide front rail. 6" (152mm) legs with adjustable feet. Six robust 2 piece 30,000 Btuh/8.797 kW (Natural gas), cast open burners set in split cast iron ergonomic grates. 24" (610mm) raised griddle/broiler with cast iron burners each rated at 14,500 Btuh/4.25kW. Porcelain oven bottom and door liner. Two position fixed rack guide w/one oven rack. Heavy duty oven door with "keep cool" door handle. Straight steel tube oven burner 33,000 Btuh/9.67 kW (natural gas) provides quality bake and good recovery . Oven thermostat ranges from Low to 500° F (260° C). Available with storage base.

C US

Garland Commercial Ranges Ltd.
1177 Kamato Road,
Mississauga, Ontario
L4W 1X4 CANADA

General Inquries 1-905-624-0260
USA Sales, Parts and Service 1-800-424-2411
Canadian Sales 1-888-442-7526
Canada or USA Parts/Service 1-800-427-6668

Manitowoc

SUNFIRE®

X Series 60" Raised Griddle/Broiler Gas Range

Model Number	Description	Total BTU/Hr Natural	Shipping Information		
			Lbs.	Kg	Cu Ft
X60-6R24RR	6 Open Burners, 24" Raised Griddle/Broiler w/ (2) Standard Ovens	279,000	828	376	81
X60-6R24RS	6 Open Burners, 24" Raised Griddle/Broiler w/ (1) Standard Ovens & Storage Base	246,000	787	357	81

Width In (mm)	Depth In (mm)	Height w/shelf In (mm)	Oven Interior-in (mm)			Combustible Wall Clearance-In (mm)		Entry Clearances In (mm)		Manifold Operating Pressure	
			Height	Depth	Width	Sides	Rear	Crated	Uncrated	Natural	Propane
59-1/16 (1500)	33-1/2 (8512	57 (1448)	13 (330)	22 (559)	26-1/4 (667)	14 (356)	6 (152)	37 (940)	36-1/2 (927)	4.5" WC 11 mbar	10" 25 mbar

Gas input ratings shown for installations up to 2000 ft.,(610m) above sea level. Please specify altitudes over 2000 ft.

Burner Ratings (BTU/Hr/kW)			
Gas Type	Open Top	Standard Oven	Raised Griddle/Broiler
Natural	30,000/8.79	33,000/9.67	33,000/9.66
Propane	26,000/7.61	29,000/8.50	33,000/9.66

Note: Installation clearance reductions are applicable only where local codes permit.

This product is not approved for residential use.

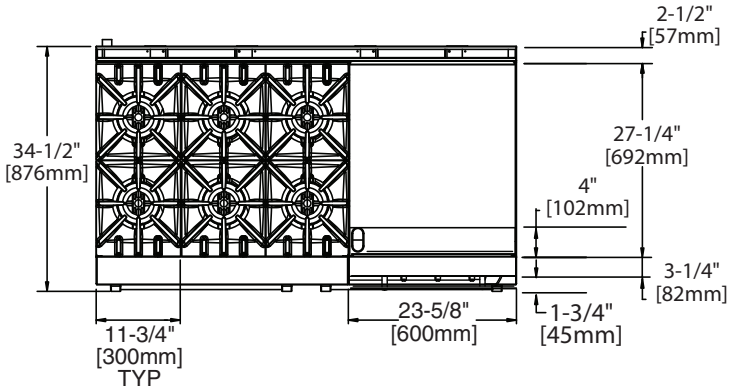

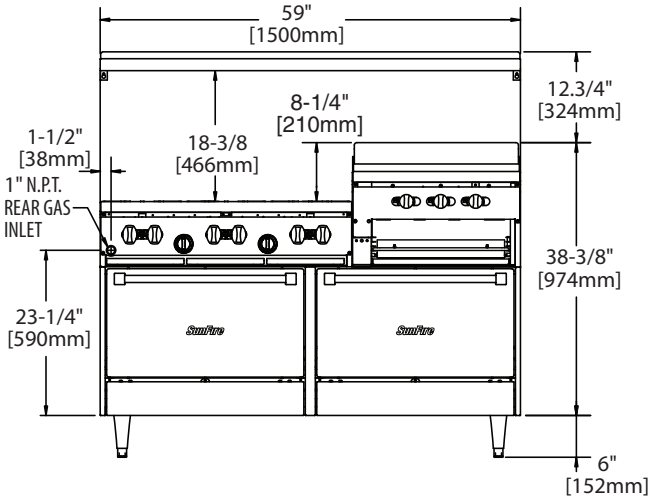

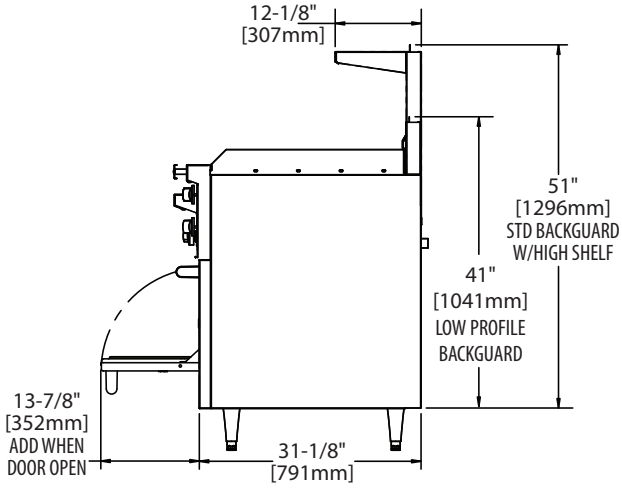

Form# XRB60 Series (04/26/12)

Garland Commercial Ranges Ltd.
1177 Kamato Road,
Mississauga, Ontario
L4W 1X4 CANADA

General Inquries 1-905-624-0260
USA Sales, Parts and Service 1-800-424-2411
Canadian Sales 1-888-442-7526
Canada or USA Parts/Service 1-800-427-6668

Manitowoc