TRUE FOOD SERVICE EQUIPMENT, INC.
2001 East Terra Lane • O'Fallon, Missouri 63366-4434 • (636)240-2400
Fax (636)272-2408 • Toll Free (800)325-6152 • Intl Fax# (001)636-272-7546
Parts Dept. (800)424-TRUE • Parts Dept. Fax# (636)272-9471 • www.truemfg.com

Project Name: _____
Location: _____
Item #: _____ *Qty:* _____
Model #: _____

AIA #
SIS #

Model:
TUC-27G-HC-LD-ADA

Undercounter:
ADA Compliant Glass Door Refrigerator with Hydrocarbon Refrigerant

TUC-27G-HC-LD-ADA

- Designed using the highest quality materials and components to provide the user with colder product temperatures, lower utility costs, exceptional food safety and the best value in today's food service marketplace.
- 3" (77 mm) diameter stem castors standard. 34" (864 mm) work surface height. Complies with the Americans with Disabilities Act (ADA) requirements.
- Factory engineered, self-contained, capillary tube system using environmentally friendly R290 hydro carbon refrigerant that has zero (0) ozone depletion potential (ODP), & three (3) global warming potential (GWP).
- Oversized, environmentally friendly forced-air refrigeration system holds 33°F to 38°F (.5°C to 3.3°C).
- All stainless steel front, top and ends. Matching aluminum finished back.
- Interior - attractive, NSF approved, clear coated aluminum liner with stainless steel floor.
- Energy efficient, "Low-E", double pane thermal glass door.
- Heavy duty PVC coated wire shelves.
- Foamed-in-place using Ecomate. A high density, polyurethane insulation that has zero ozone depletion potential (ODP) and zero global warming potential (GWP).

ROUGH-IN DATA

Specifications subject to change without notice.
Chart dimensions rounded up to the nearest ⅛" (millimeters rounded up to next whole number).

Model	Doors	Shelves	Cabinet Dimensions (inches) (mm) L	D†	H*	Counter Height	HP	Voltage	Amps	NEMA Config.	Cord Length (total ft.) (total m)	Crated Weight (lbs.) (kg)
TUC-27G-HC-LD-ADA	1	2	27⅝ 702	30⅛ 766	29¾ 756	34 864	⅙ ¼	115/60/1 230-240/50/1	2.0 1.8	5-15P ▲	7 2.13	195 89

† Depth does not include 1" (26 mm) for rear bumpers.
* Height does not include 4" (102 mm) for castors.

▲Plug type varies by country.

MADE IN U.S.A. SINCE 1945 · 5 YEAR COMPRESSOR WARRANTY USA · UL · NSF · CE · natural refrigerant

5/15 Printed in U.S.A.

APPROVALS:

AVAILABLE AT:

Model:

TUC-27G-HC-LD-ADA

Undercounter:

ADA Compliant Glass Door Refrigerator with Hydrocarbon Refrigerant

STANDARD FEATURES

DESIGN

- True's undercounter units are designed with enduring quality that protects your long term investment.
- True's commitment to using the highest quality materials and oversized refrigeration systems provides the user with colder product temperatures, lower utility costs, exceptional food safety and the best value in today's food service marketplace.

REFRIGERATION SYSTEM

- Factory engineered, self-contained, capillary tube system using environmentally friendly R290 hydro carbon refrigerant that has zero (0) ozone depletion potential (ODP), & three (3) global warming potential (GWP).
- Oversized, factory balanced refrigeration system with guided airflow to provide uniform product temperatures.
- Extra large evaporator coil balanced with higher horsepower compressor and large condenser maintains cabinet temperatures of 33°F to 38°F (.56°C to 3.33°C) for the best in food preservation.
- Sealed, cast iron, self-lubricating evaporator fan motor(s) and larger fan blades give True undercounter units a more efficient, low velocity, high volume airflow design. This unique design ensures faster temperature recovery and shorter run times in the busiest of foodservice environments.
- Condensing unit access in back of cabinet, slides out for easy maintenance.

CABINET CONSTRUCTION

- Exterior - stainless steel front, top and ends. Matching aluminum finished back.
- Interior - attractive, NSF approved, clear coated aluminum liner with stainless steel floor.
- Insulation - entire cabinet structure is foamed-in-place using Ecomate. A high density, polyurethane insulation that has zero ozone depletion potential (ODP) and zero global warming potential (GWP).
- 3" (77 mm) diameter stem castors. 34" (864 mm) work surface height. Compliant with American Disablities Act (ADA) requirements.

DOOR

- "Low-E", double pane thermal glass assembly with extruded aluminum frame.
- Door fitted with 12" (305 mm) long extruded aluminum handle.
- Positive seal self-closing door. Door swings within cabinet dimensions.
- Magnetic door gasket of one piece construction, removable without tools for ease of cleaning.

SHELVING

- Two (2) adjustable, heavy duty PVC coated wire shelves 23¼"L x 16"D (591 mm x 407 mm). Four (4) chrome plated shelf clips included per shelf.
- Shelf support pilasters made of same material as cabinet interior; shelves are adjustable on ½" (13 mm) increments.

LIGHTING

- Fluorescent interior lighting.

MODEL FEATURES

- Evaporator is epoxy coated to eliminate the potential of corrosion.
- Designed using the highest quality materials and components to provide the user with colder product temperatures, lower utility costs, exceptional food safety and the best value in today's food service marketplace.
- NSF-7 compliant for open food product.

ELECTRICAL

- Unit completely pre-wired at factory and ready for final connection to a 115/60/1 phase, 15 amp dedicated outlet. Cord and plug set included.

115/60/1
NEMA-5-15R

OPTIONAL FEATURES/ACCESSORIES

Upcharge and lead times may apply.

- ❑ 230 - 240V / 50 Hz.
- ❑ Single overshelf.
- ❑ Double overshelf.
- ❑ Stacking collar.
- ❑ 30" (762 mm) deep, ½" (13 mm) thick, white polyethylene cutting board. Requires "L" brackets.
- ❑ 30" (762 mm) deep, ½" (13 mm) thick, composite cutting board. Requires "L" brackets.
- ❑ Heavy duty 16 gauge top.
- ❑ Exterior rectangular digital temperature display (factory installed).
- ❑ Standard height units with 5" (127 mm) diameter castors. 36" (915 mm) work surface height.
- ❑ Low profile models with 31⅞" (810 mm) work surface height.

PLAN VIEW

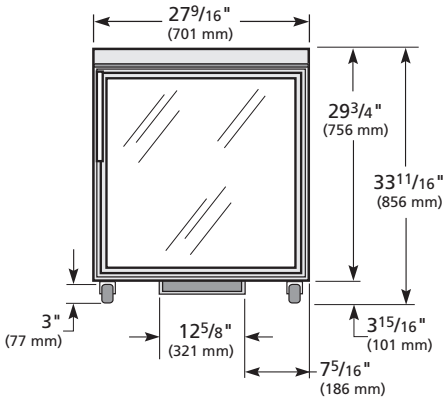

ELEVATION

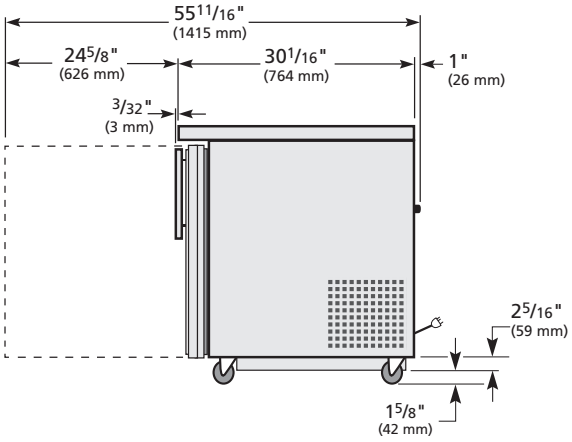

RIGHT VIEW

WARRANTY*
Three year warranty on all parts and labor and an additional 2 year warranty on compressor. (U.S.A. only)

*RESIDENTIAL APPLICATIONS: TRUE assumes no liability for parts or labor coverage for component failure or other damages resulting from installation in non-commercial or residential applications.

METRIC DIMENSIONS ROUNDED UP TO THE NEAREST WHOLE MILLIMETER

SPECIFICATIONS SUBJECT TO CHANGE WITHOUT NOTICE

Model	Elevation	Right	Plan	3D	Back
TUC-27G-HC-LD-ADA	TFQY18E	TFQY18S	TFQY01P	TFQY183	

TRUE FOOD SERVICE EQUIPMENT

2001 East Terra Lane • O'Fallon, Missouri 63366-4434 • (636)240-2400 • Fax (636)272-2408 • Toll Free (800)325-6152 • Intl. Fax# (001)636-272-7546 • www.truemfg.com