T&S BRASS AND BRONZE WORKS, INC.
2 SADDLEBACK COVE / P.O. BOX 1088 / TRAVELERS REST, SC 29690
PHONE 800-476-4103 FAX 864- 834-3518

REG.#A2601
ISO #9002

Model No.
B-1929
Item No.:

Job Name:	Architect/Engineer Approval:

Notes:

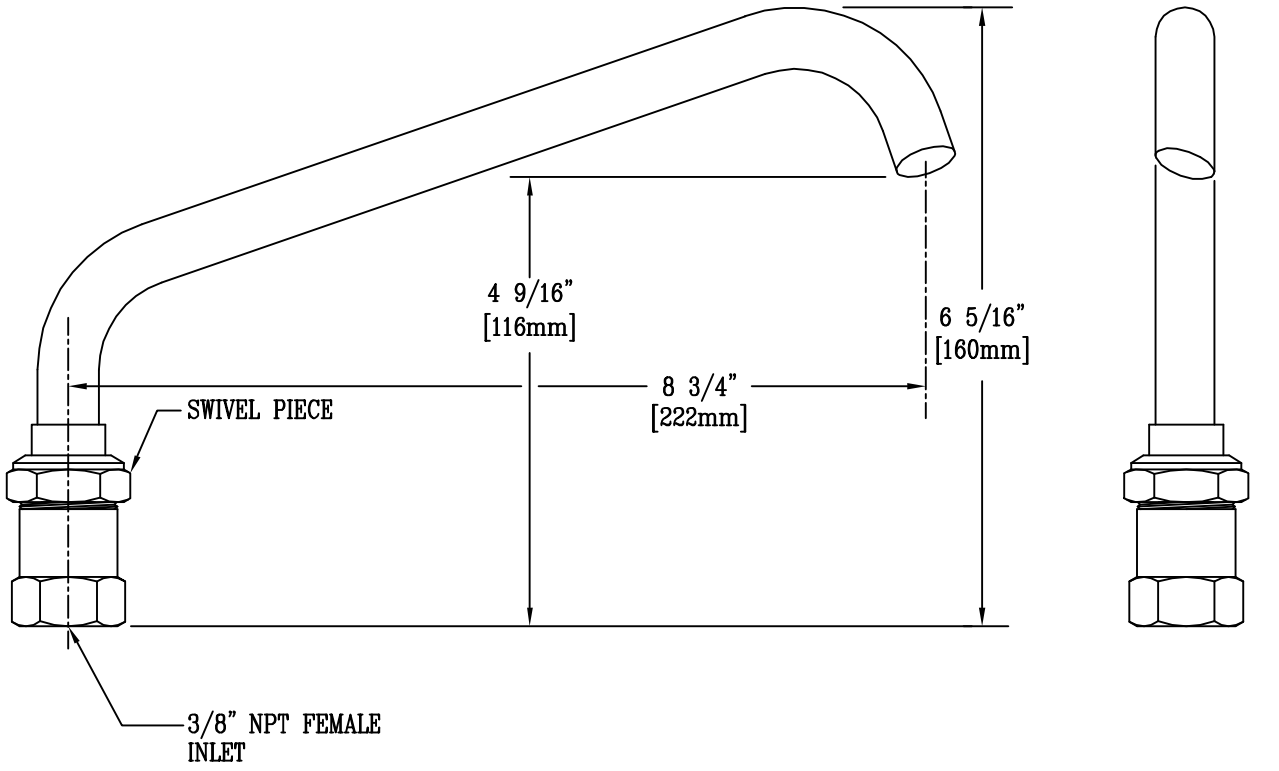

Product Description:	Drawn:	Checked	Scale:
SPECIAL NOZZLE WITH SWIVEL BODY, AND 3/8" IPS FEMALE INLET	WJS	ARY	6"=1'
	Approved		Date:
	CA		8/24/95